7. Timing Belt

A: REPLACEMENT

1. NON-TURBO MODEL

1) Remove the radiator fan and air conditioner fan. <Ref. to CO(H4SO)-27, REMOVAL, Radiator Main Fan and Fan Motor.>, <Ref. to CO(H4SO)-29, REMOVAL, Radiator Sub Fan and Fan Motor.>
2) Protect the radiator with cardboard and blanket.
3) Remove the V-belt covers.

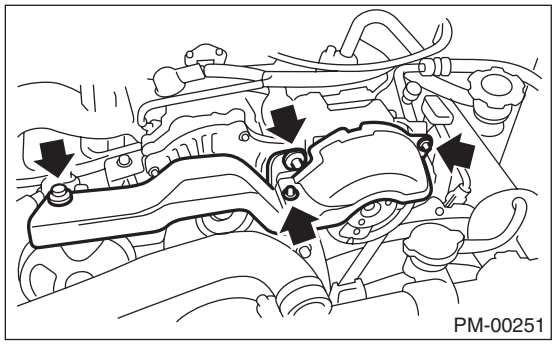

4) Remove the V-belts. <Ref. to ME(H4SO)-39, REMOVAL, V-belt.>
5) Remove the A/C compressor V-belt tensioner.
6) Use the ST to lock the crankshaft, and remove the pulley bolt.
ST 499977100 CRANK PULLEY WRENCH

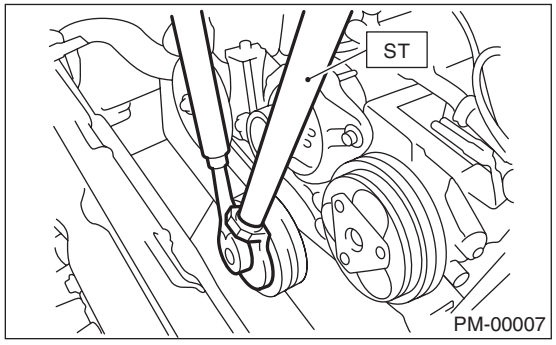

7) Remove the crank pulley.
8) Remove the belt cover LH.
9) Remove the front timing belt cover.
10) Remove the timing belt guide. (MT model)

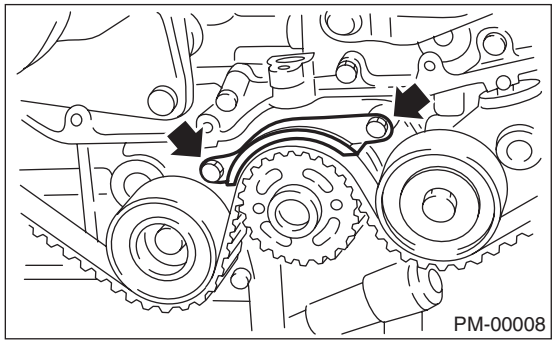

11) Turn the crankshaft and align the alignment marks on crankshaft, and left and right cam sprockets with notches of belt cover and cylinder block.
ST 499987500 CRANKSHAFT SOCKET

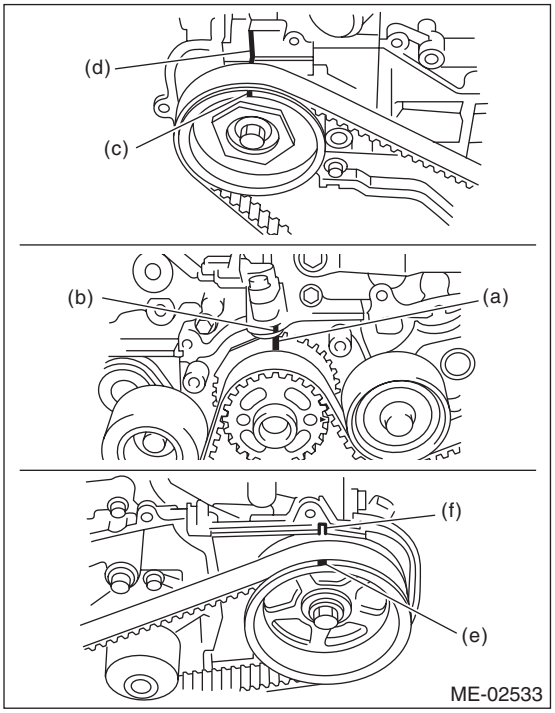

(a) (c) (e) Notch
(b) (d) (f) Alignment mark

12) Remove the belt idler.

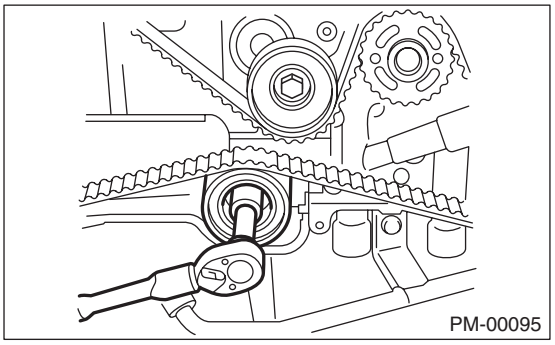

13) Remove the belt idler (No. 2).

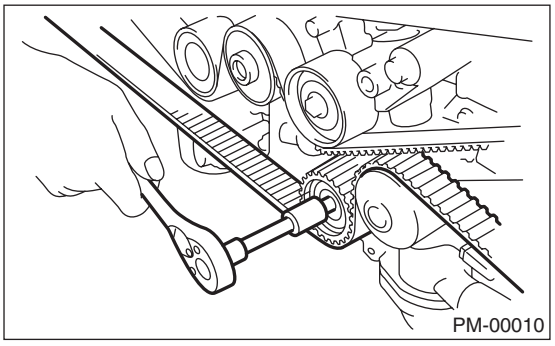

14) Remove the timing belt.

15) Remove the automatic belt tension adjuster assembly.

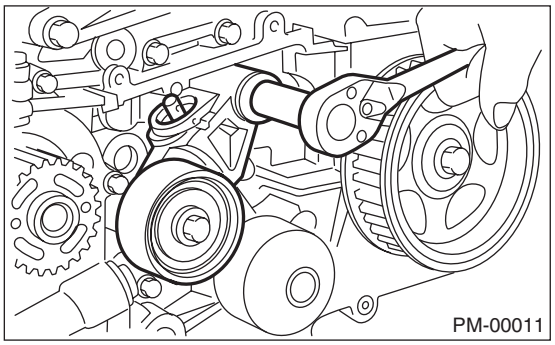

16) Install in the reverse order of removal. <Ref. to ME(H4SO)-44, INSTALLATION, Timing Belt.>

2. TURBO MODEL

1) Remove the radiator fan and air conditioner fan. <Ref. to CO(H4DOTC)-30, REMOVAL, Radiator Main Fan and Fan Motor.>, <Ref. to CO(H4DOTC)-32, REMOVAL, Radiator Sub Fan and Fan Motor.>
2) Protect the radiator with cardboard and blanket.
3) Remove the V-belts. <Ref. to ME(H4DOTC)-44, REMOVAL, V-belt.>
4) Remove the A/C compressor V-belt tensioner.
5) Remove the pulley bolt. Using the ST, lock the crankshaft.
ST 499977100 CRANK PULLEY WRENCH

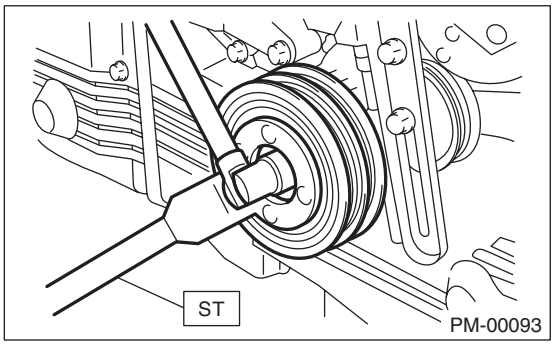

6) Remove the crank pulley.
7) Remove the belt cover (LH).
8) Remove the belt cover (RH).
9) Remove the front belt cover.
10) Remove the timing belt guide. (MT model)

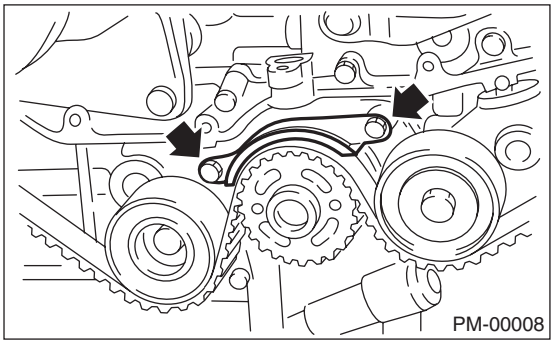

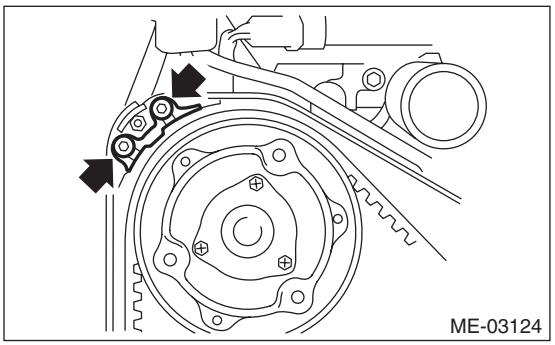

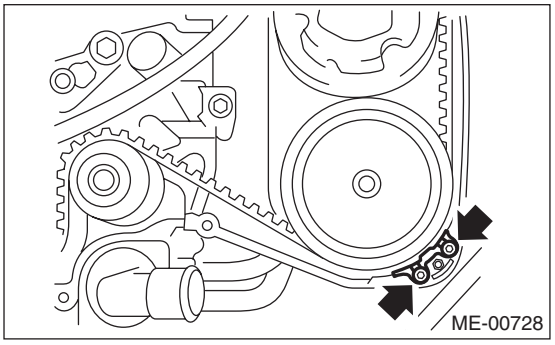

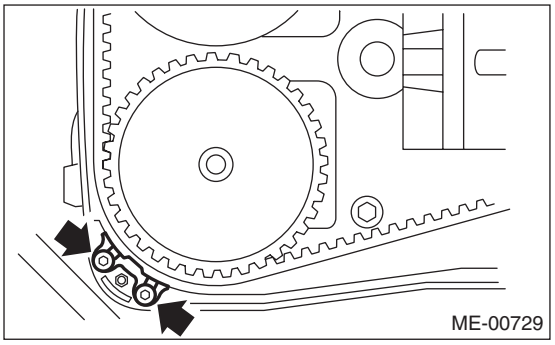

11) Turn the crankshaft and align the alignment marks on crankshaft, and left and right cam sprockets with notches of belt cover and cylinder block. Use the ST to turn crankshaft.
ST 499987500 CRANKSHAFT SOCKET

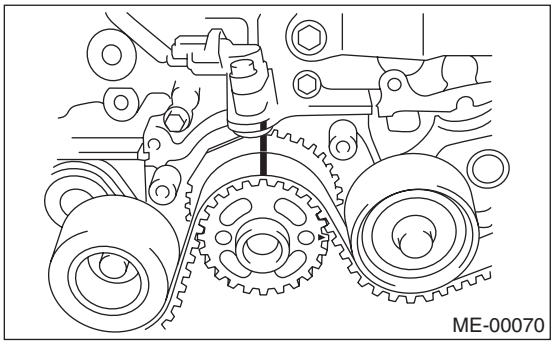
ME-00070

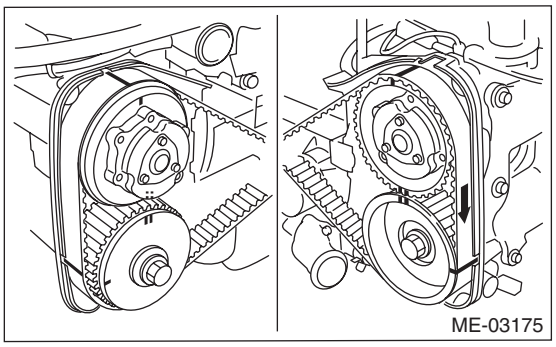
ME-03175

12) Remove the belt idler.

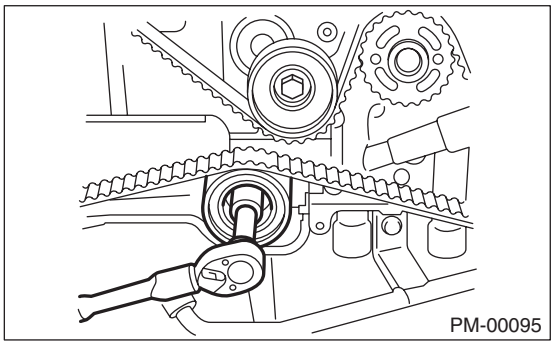
PM-00095

13) Remove the timing belt.
14) Remove the automatic belt tension adjuster assembly.

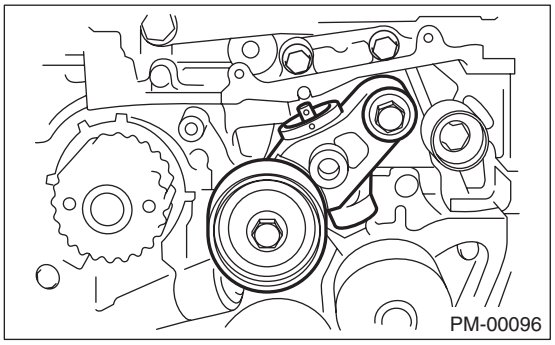
PM-00096

15) Install in the reverse order of removal. <Ref. to ME(H4DOTC)-50, INSTALLATION, Timing Belt.>

CAUTION:
When installing the timing belt, be sure to align all alignment marks on the belt with corresponding marks on the sprockets. If incorrectly installed, interference between pistons and valves may occur.

B: INSPECTION

1. NON-TURBO MODEL

1) Remove the timing belt cover (LH).
2) While cranking engine at least four rotations, check the timing belt back surface for cracks or damage. Replace the faulty timing belt as needed.
3) When the side part of timing belt (arrow direction shown in the figure) is abnormally worn (fluff or jumping out of core) or damaged, check the idlers, tensioner, water pump pulley and cam sprocket to determine idler alignment (squareness). Replace the worn or damaged timing belt.

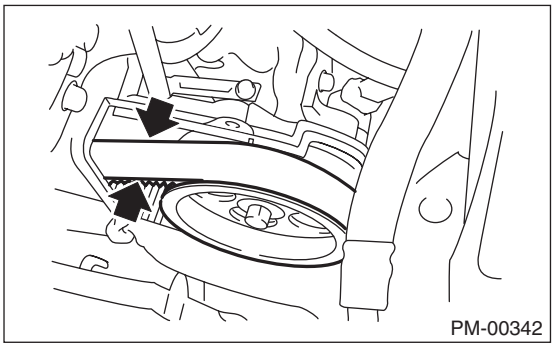
PM-00342

4) Install the timing belt cover (LH).

2. TURBO MODEL

1) Remove the timing belt cover (LH).
2) While cranking engine at least four rotations, check the timing belt back surface for cracks or damage. Replace the faulty timing belt as needed.
3) When the side part of timing belt (arrow direction shown in the figure) is abnormally worn (fluff or jumping out of core) or damaged, check the idlers, tensioner, water pump pulley and cam sprocket to determine idler alignment (squareness). Replace the worn or damaged timing belt.

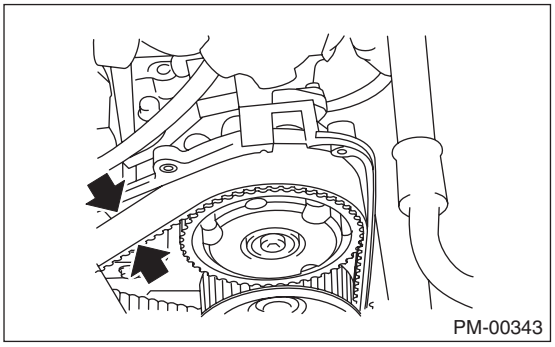
PM-00343

4) Install the timing belt cover (LH).